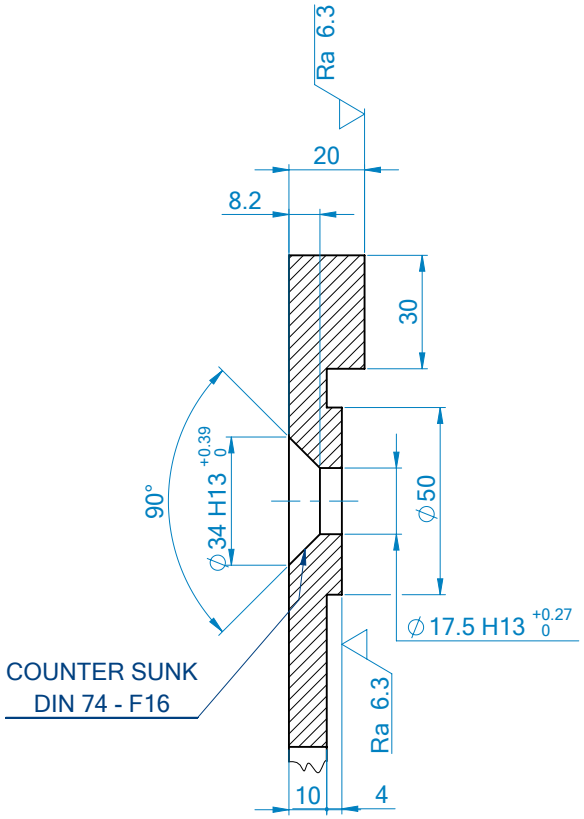

SECTION A-A
⌒ 15.00°
SCALE 1 : 2

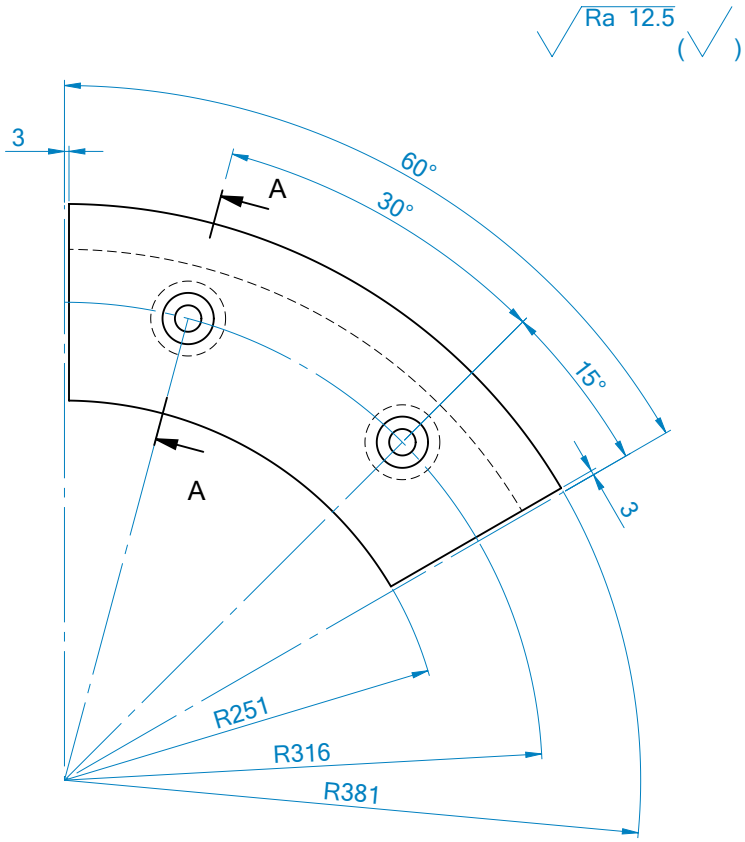

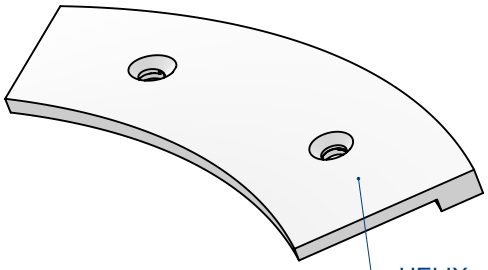

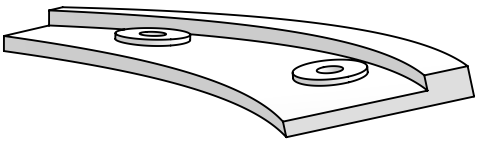

HELIX
PROJECTED INSIDE DIA : 502 mm
PROJECTED OUTSIDE DIA: 762 mm
PITCH: 560mm
MAX. THICKNESS : 20mm
MIN. THICKNESS : 10mm

Note:
- All sharp edges must be without burrs.
- For more dimensions refer to STEP file.

Issued for: ☐ Information ☑ Construction ☐ Approved ☐ As Built	Consultant: ESPIM — East Steel pishgaman Industrial Company	Part Name: Shoe			Client: NISCO National Iranian Steel Company
		Assy. Name: Shaft And Flight			
UNLESS OTHERWISE SPECIFIDE: MACHINED ISO 2768-mK; GENERAL ISO 2768-cK; CASTING ISO 8062-CT8 & CTG5; SYNTHETIC DIN 16901 - 140 A; WELDING ISO 13920-AE; THREAD ISO 965-7H/6g; CHAMFER: ; FILLET: ; COATING: ; HARDNESS:	Name / Date: DRAWN H.Zekavati 1404/08/25; CHK'D A.Hajari 1404/08/26; APPV'D A.Rouhi 1404/08/26	Equipment Title: Screw Type Classifier (DS-AE35)			Supplier NO.: 151810MA3835007
		Material: 0.6025 (EN-GJL-250)			ID Code: -
First Angle Proj.		Originator: ESPIM	Area: G D1		DWG NO.: ME-W25-05-DW0053
		Weight: ≈ 4.1 Kg	Scale: 1:5	Size: A4	Sheet: 1 OF 1 — Revision: 0

h.hajarii 4 3/2/2026 8:05:09 AM